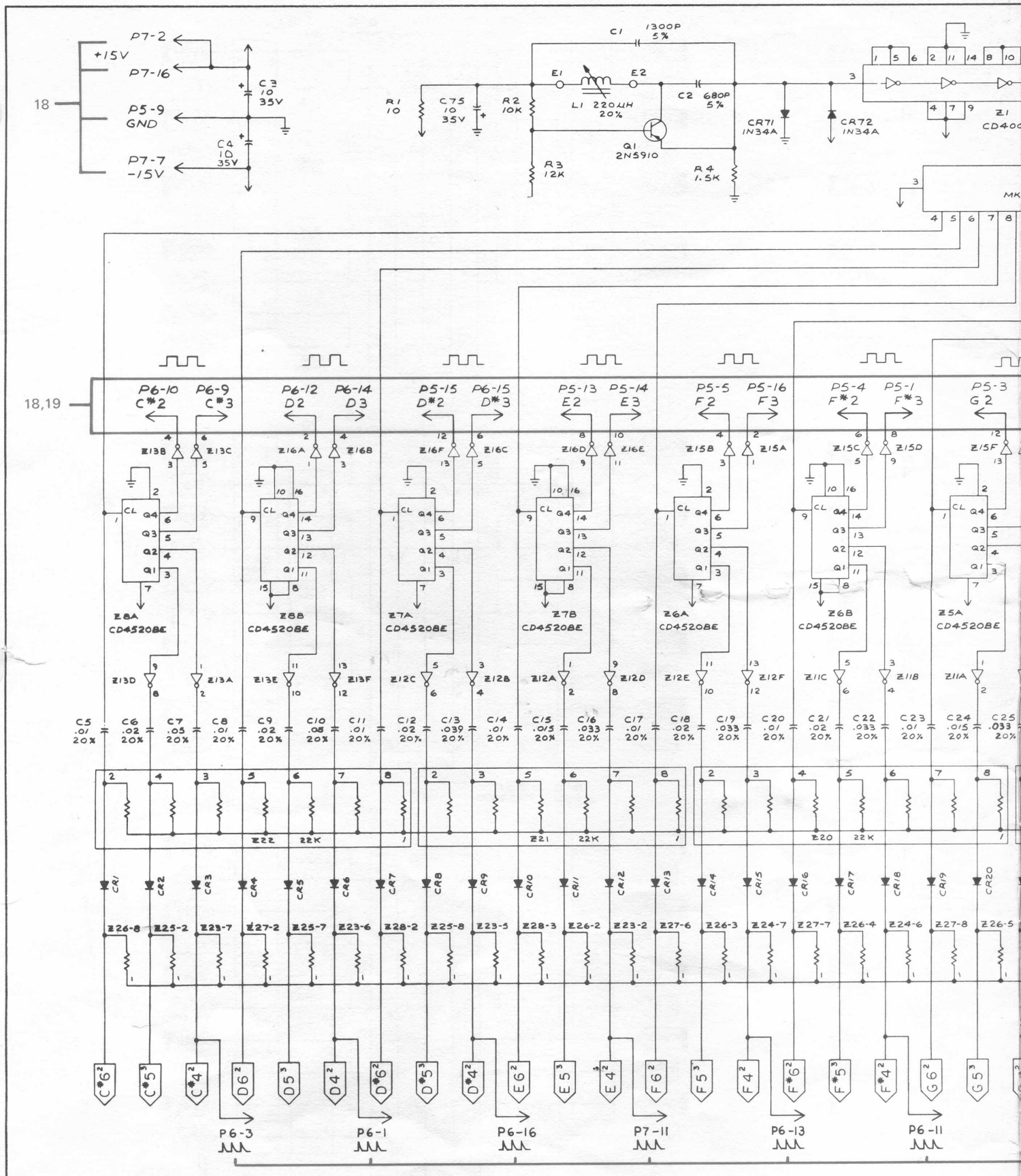

RED NUMBERS INDICATE BOARD-TO-BOARD CONNECTIONS. THEY ARE THE PAGE NUMBERS OF SCHEMATICS. FOR EXAMPLE, A RED 18 INDICATES THAT THE LOCATION OF THE CONNECTION IS FOUND ON PAGE 18.