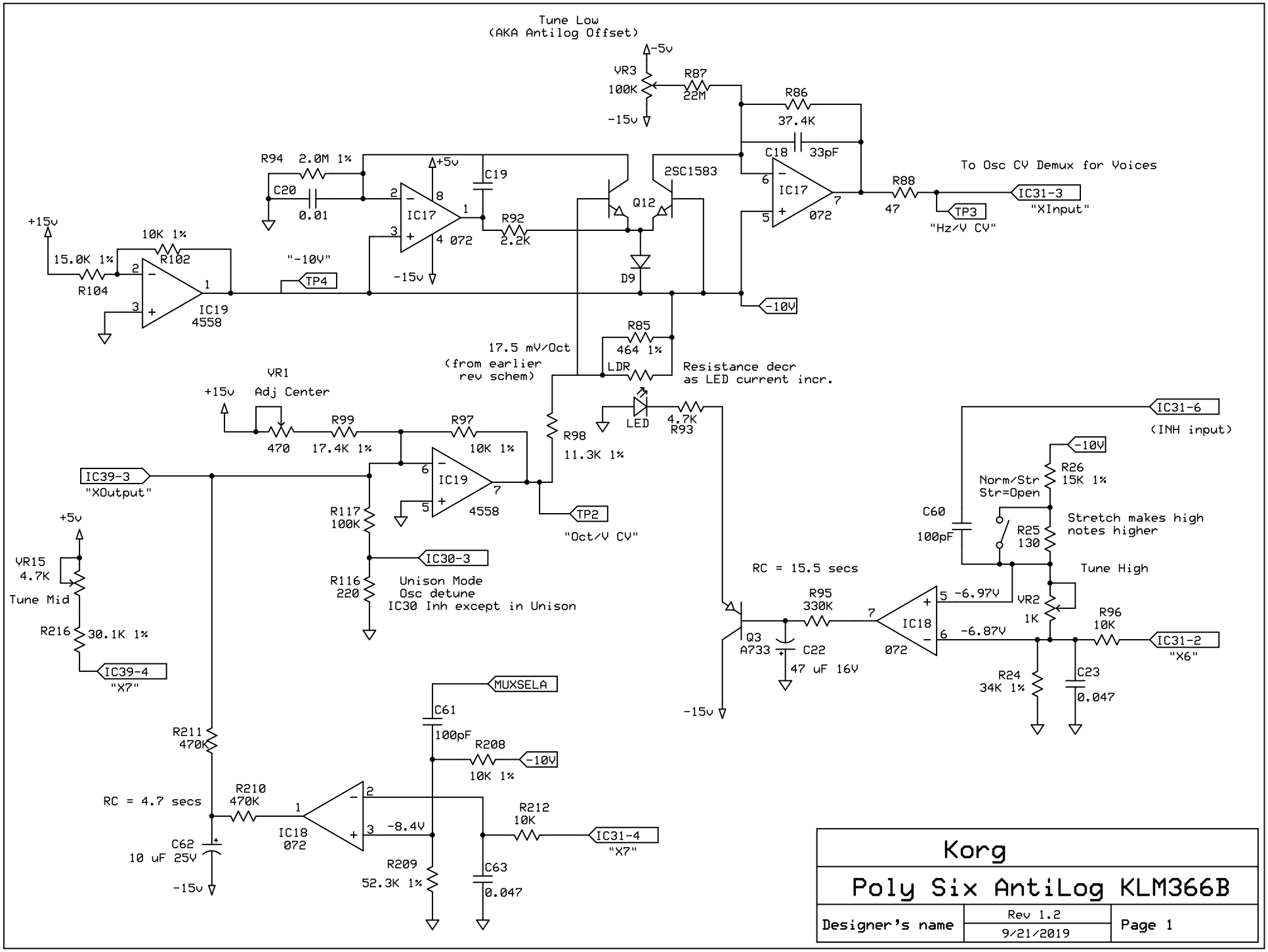

Korg		
Poly Six AntiLog KLM366B		
Designer's name	Rev 1.2 9/21/2019	Page 1