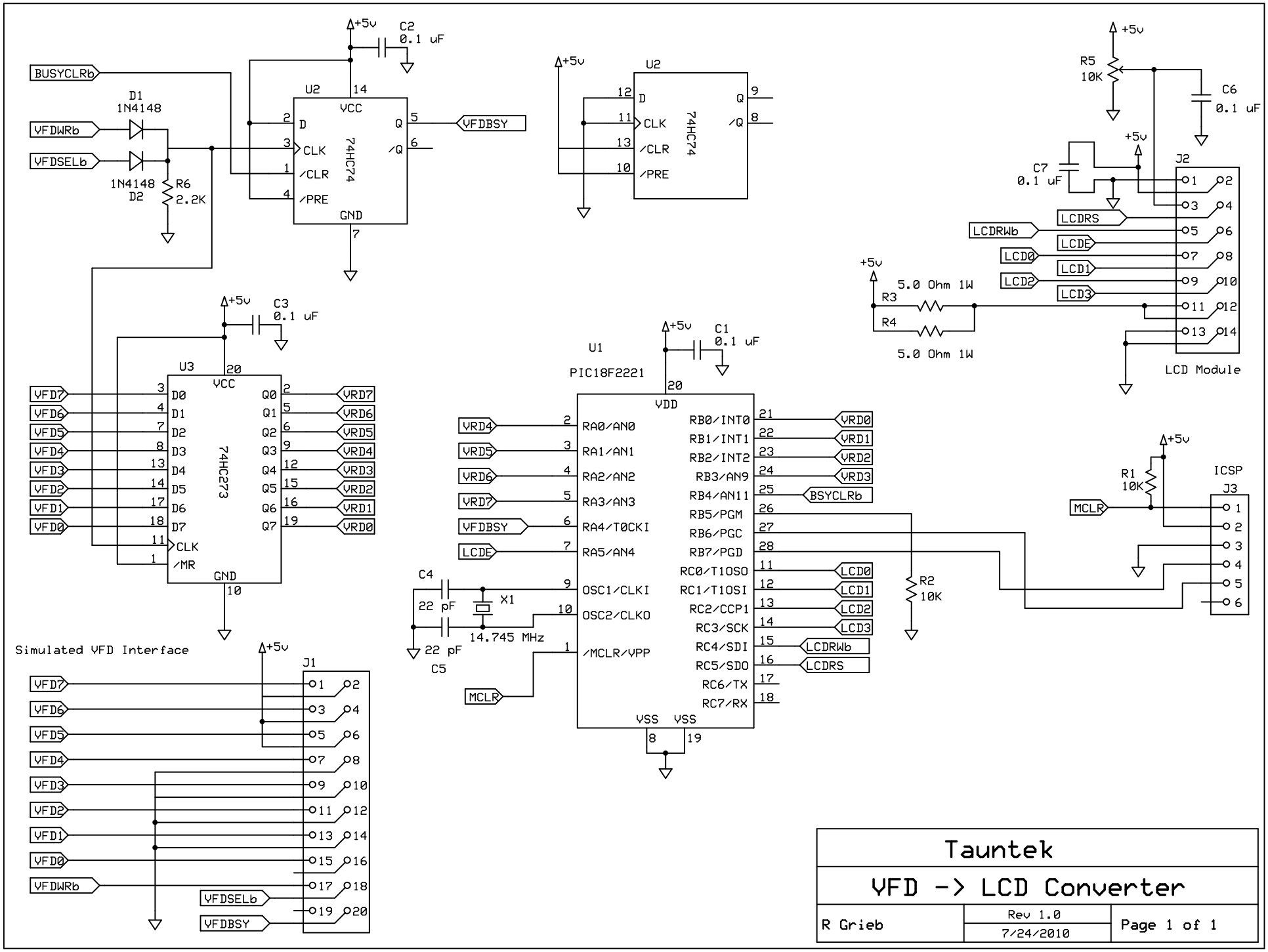
BUSYCLRb
D1
1N4148
VFDWRb
VFDSELb
1N4148
D2
R6
2.2K
+5v
C2
0.1 uF
U2
74HC74
VCC
GND
D
CLK
/CLR
/PRE
Q
/Q
VFDBSY
U2
74HC74
C3
0.1 uF
U3
74HC273
VCC
GND
D0
D1
D2
D3
D4
D5
D6
D7
CLK
/MR
Q0
Q1
Q2
Q3
Q4
Q5
Q6
Q7
VFD7
VFD6
VFD5
VFD4
VFD3
VFD2
VFD1
VFD0
VRD7
VRD6
VRD5
VRD4
VRD3
VRD2
VRD1
VRD0
U1
PIC18F2221
C1
0.1 uF
VDD
VSS
RA0/AN0
RA1/AN1
RA2/AN2
RA3/AN3
RA4/T0CKI
RA5/AN4
OSC1/CLKI
OSC2/CLKO
/MCLR/VPP
RB0/INT0
RB1/INT1
RB2/INT2
RB3/AN9
RB4/AN11
RB5/PGM
RB6/PGC
RB7/PGD
RC0/T1OSO
RC1/T1OSI
RC2/CCP1
RC3/SCK
RC4/SDI
RC5/SDO
RC6/TX
RC7/RX
BSYCLRb
LCDE
LCDRWb
LCDRS
C4
22 pF
C5
22 pF
X1
14.745 MHz
MCLR
R2
10K
R5
10K
C6
0.1 uF
C7
0.1 uF
J2
LCD Module
R3
5.0 Ohm 1W
R4
5.0 Ohm 1W
R1
10K
ICSP
J3
Simulated VFD Interface
J1
VFDSELb
VFDBSY
Tauntek
VFD -> LCD Converter
R Grieb
Rev 1.0
7/24/2010
Page 1 of 1