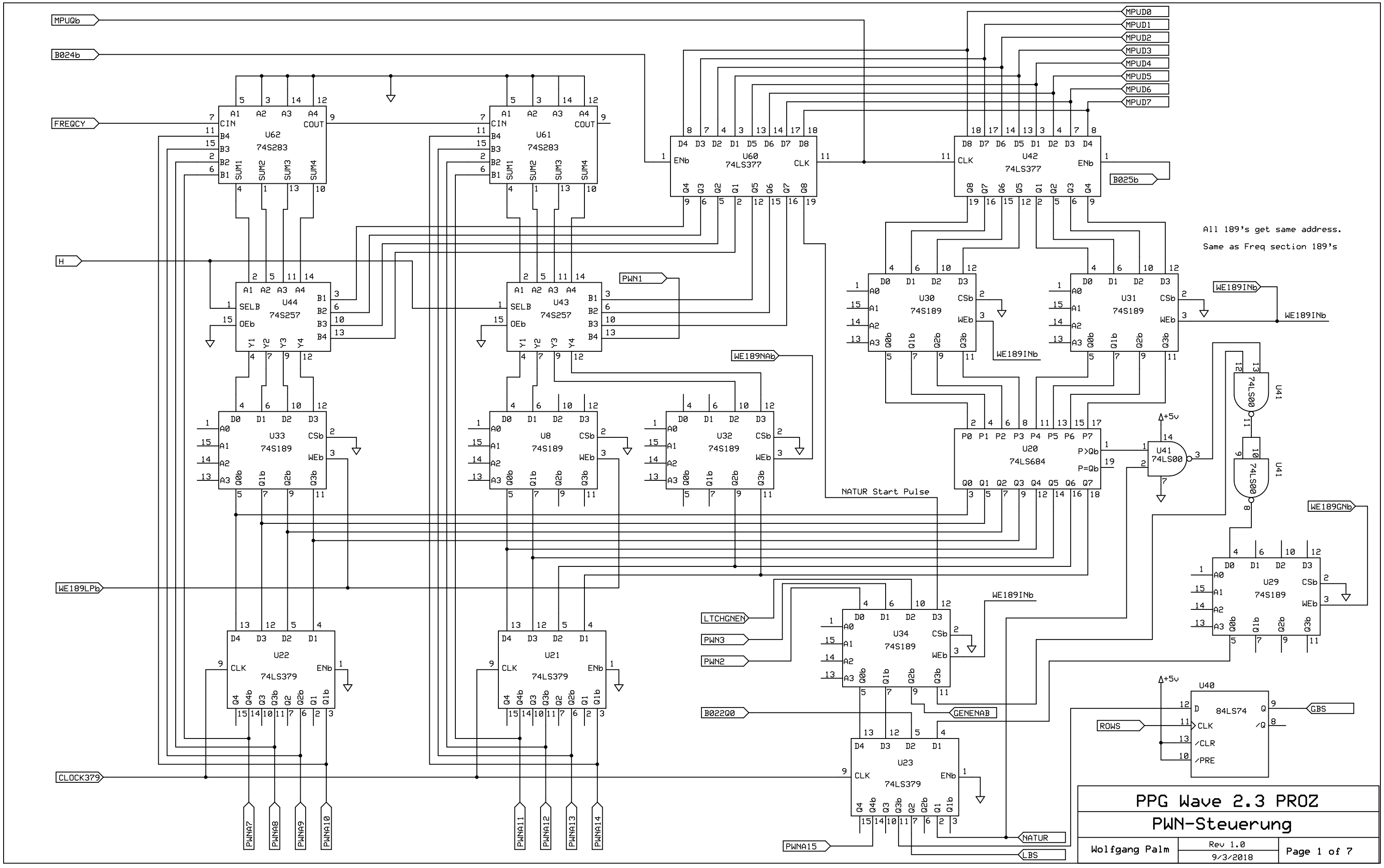
MPUQb
B024b
FREQCY
H
PWN1
WE189NAb
WE189LPb
CLOCK379
LTCHGNEN
PWN3
PWN2
B022Q0
PWNA15
NATUR
LBS
GENENAB
NATUR Start Pulse
WE189INb
WE189GNb
B025b
ROWS
GBS
+5v
MPUD0
MPUD1
MPUD2
MPUD3
MPUD4
MPUD5
MPUD6
MPUD7
PWNA7
PWNA8
PWNA9
PWNA10
PWNA11
PWNA12
PWNA13
PWNA14
U62 74S283
U61 74S283
U60 74LS377
U42 74LS377
U44 74S257
U43 74S257
U30 74S189
U31 74S189
U33 74S189
U8 74S189
U32 74S189
U20 74LS684
U41 74LS00
U29 74S189
U34 74S189
U22 74LS379
U21 74LS379
U23 74LS379
U40 84LS74
All 189's get same address.
Same as Freq section 189's
PPG Wave 2.3 PROZ
PWN-Steuerung
Wolfgang Palm
Rev 1.0
9/3/2018
Page 1 of 7