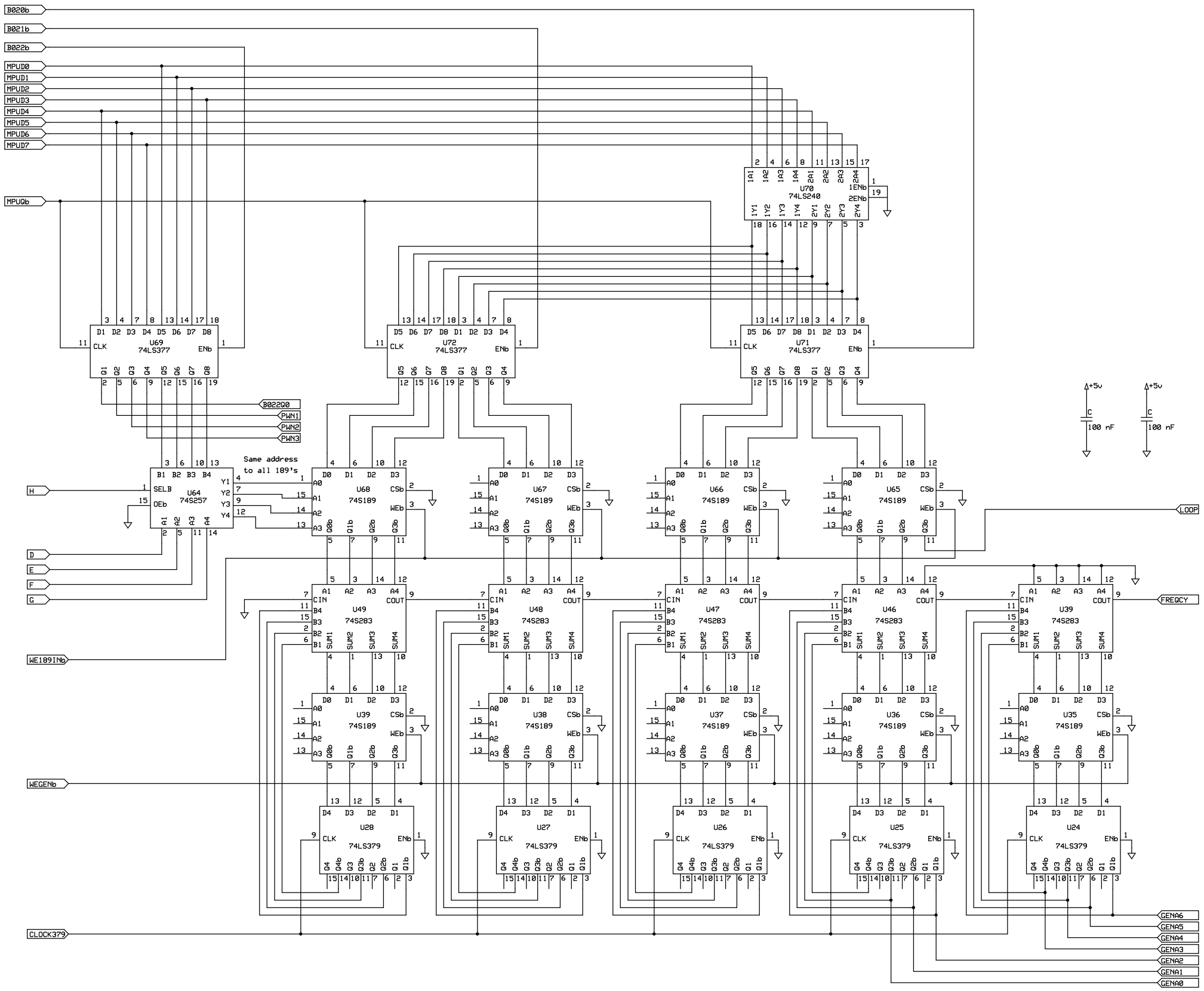

PPG Wave 2.3 PROZ		
Frequenzerzeugung		
Wolfgang Palm	Rev 1.0 9/3/2018	Page 2 of 7